RC Plane

INTRODUCTION

The RC Plane Challenge is designed to test participants' skills in aircraft design, flight control, and maneuvering. Teams must build and operate a remote-controlled plane capable of stable flight, precise navigation, and accurate mission execution within the defined arena and challenge constraints.

PROBLEM STATEMENT

Participating teams must design and operate a fully functional Remote-Controlled (RC) aircraft that satisfies the prescribed technical constraints and successfully completes the challenge rounds.
The event is divided into two rounds:

- Round 1 – Abstract Submission
- Round 2 – Flight Mission Challenge

Mohammed Ali
Outreach Head
ali@dronotics.in

Vaibhav Katariya
Head Events
vaibhav@dronotics.in

Yasharth Singh
Management Head
yasharth@dronotics.in

Rakshit Suneja
Creative Head
rakshit@dronotics.in

AIRCRAFT SPECIFICATIONS

The aircraft should satisfy the following specifications:

- The wingspan should not exceed 150 cm.
- The maximum permissible weight (without payload) is 2500 grams.
- 3 Cell 11.2V battery is the largest permitted size for a battery used for servos and the propeller motor.
- The combined weight of the propeller and motor should not weigh more than 100 gm and should not have a motor kV higher than 1400 kV.
- The length of the aircraft should be no more than 200 cm.
- Propeller length should not exceed 12 inches.
- Only single-motor aircraft are permitted.
- Use of composite materials is not permitted.
- The use of gyroscopes, accelerometers, and other similar gadgets that provide automated assistance is strictly prohibited in flying.

ABSTRACT SUBMISSION ROUND

The participating teams must submit an abstract of their drone's concept, in proper documented form. This should include its configuration, design, features, estimated cost, and an approach to tackle the problem statement. The teams must compile all this information in a PDF file. If any extra files are to be included, the submission must be in the form of a ZIP file. Please note that the files submitted should NOT be password-protected or corrupted. In either of the cases, the submissions would be directly rejected.

GUIDELINES FOR ABSTRACT SUBMISSION

Rough sketches of your idea including the Design Report of your model. The abstract must specify the use of software and the mechanism used in the design analysis of the drone.

- USPs (Unique Selling Propositions) of your design and innovations made by you should be mentioned in the report and mention how they are going to tackle the specific challenges.
- An abstract of the idea needs to be uploaded on the Dronotics website before the deadline.
- The abstract should not exceed 500 words and should include the following details of all team members along with the Team.

Cover Page Details:

The cover page of the submission must include the following information:

- Team Name
- Team Leader Details:
  - Name of Team Leader
  - College / Institute Name
  - Year of Study
  - Email ID
  - Phone Number
- Team Members:
  - Names of all team members

File Naming Convention:

The file must be submitted in the following format:

RCP_<TeamName>_<LeaderName>_abstract.pdf

Example: RCP_ABC_AmanGandotra_abstract.pdf

Submission Email

The abstract/design report must be mailed to:
dronoticsjiit128@gmail.com

The Subject of email should be in this format:
RC Plane - <TeamName> - <LeaderName> Abstract
Example: RC Plane - ABC - Aman Gandotra Abstract

Important Note

- Only PDF format submissions will be accepted.
- Files must not be corrupted or password-protected.
- Any submission not following the naming convention may be rejected.

STAGE 2: Flight Mission Challenge

This round evaluates the aircraft's endurance, payload handling, drop accuracy, and gliding capability under controlled flight conditions.

Task Overview

- Participants must take off using hand launch
- The aircraft must maintain flight for a minimum of 2 minutes while carrying the payload a spherical payload (e.g., a golf ball) which will be provided
- The aircraft must navigate to the designated payload drop zone
- The payload must be released within the target area consisting of concentric circles (archery-style scoring zones)
- Points will be awarded based on the accuracy of the payload drop
- After successfully dropping the payload:
  - The aircraft must ascend vertically for approximately 6 seconds
  - The throttle must then be reduced to zero, initiating glide mode
- During glide:
  - The aircraft may be steered using control surfaces (left/right adjustments)
  - No powered thrust is allowed
- The aircraft must glide back and land as close as possible to the original starting position
- Landing should be stable and controlled

Target Image

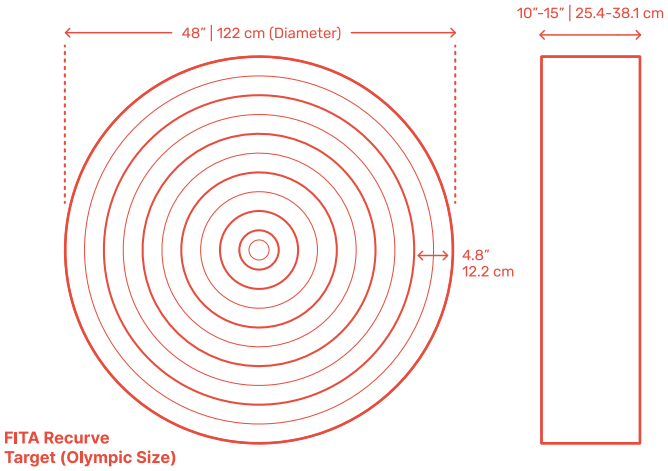

Archery board dimension may vary, following image may subject to change

Note: The organizers reserve all rights to change any or all of the above rules.

Mohammed Ali
Outreach Head
ali@dronotics.in

Vaibhav Katariya
Head Events
vaibhav@dronotics.in

Yasharth Singh
Management Head
yasharth@dronotics.in

Rakshit Suneja
Creative Head
rakshit@dronotics.in